This is an uncontrolled copy and will not be kept up to date

| Rolls-Royce | AEROSPACE ENGINEERING SPECIFICATION | RRES 90033 |
|---|---|---|
| | | Revision B |
| | | First Issued 02 Jul 09 |
| | | Revised 21 May 13 |

# Installation of Inch Self-Locking Wire Thread Inserts

TABLE OF CONTENTS:


1 SCOPE: ..... 3
2 REASONS FOR USE: ..... 3
3 APPLICABLE DOCUMENTS: ..... 3
4 DEFINITION OF TERMS: ..... 4
5 DESCRIPTION: ..... 4
6 ASSEMBLY PROCEDURE: ..... 5
7 INSPECTION OF ASSEMBLED INSERT: ..... 9
8 EXTRACTION OF INSERTS: ..... 13
9 TORQUE CHECKING EQUIPMENT: ..... 18
10 NOTES: ..... 19
APPENDIX A – INSPECTION OF TOOLING ..... 20
APPENDIX B – SUGGESTED SOLUTIONS TO PROBLEMS ..... 24


FIGURES:


FIGURE 1 – WIRE THREAD INSERT ..... 4
FIGURE 2 - ADDITIONAL PREPARATION FOR MAGNESIUM AND ALUMINIUM ..... 5
FIGURE 3 – TYPICAL INSERTING TOOL ..... 6
FIGURE 4 – ADDING INSERT TO LOADING CHAMBER ..... 6
FIGURE 5 – ENGAGE DRIVING FEATURE ..... 6
FIGURE 6 – WINDING OF INSERT ..... 6
FIGURE 7 – SEAT INSERT ..... 6
FIGURE 8 – BREAK OFF TANG ..... 7
FIGURE 9 – REMOVE TANG ..... 8
FIGURE 10 – INSTALL DEPTH ..... 8
FIGURE 11 – INSTALL DEPTH INTERPRETATION ..... 8


EXPORT CONTROLLED INFORMATION: This document contains technical data whose export is restricted by the Export Administration Act of 1979, as amended (Title 50, U.S.C., App 2401, Et Seq) and is controlled by the Export Administration Regulations (15 CFR parts 730-774) under ECCN EAR99. Diversion contrary to U.S. export law is prohibited.

PROPRIETARY RIGHTS LEGEND: Information contained herein is the property of Rolls-Royce and may not be copied, or communicated to a third-party, or used, for any purpose other than that for which it is supplied without the express written consent of Rolls-Royce. © 2013 Rolls-Royce

© Rolls-Royce Plc 2001

This document is the property of Rolls-Royce plc and may not be copied or communicated to a third party or used for any purpose other than for which it is supplied without express written authority of Rolls-Royce plc

Rolls Royce Plc 16-Sep-15 10:03:14 215424 Mathias Schuler

This is an uncontrolled copy and will not be kept up to date



FIGURE 12 – INSPECTION OF ASSEMBLED INSERT ..... 9
FIGURE 13 – USE OF TORQUE SETTING DEVICE ..... 11
FIGURE 14 - MHH ENGINEERING TORQUE MASTER DIAL SETTING RIG ..... 11
FIGURE 15 - MHH ENGINEERING TORQUE LIMITING DRIVERS. ..... 11
FIGURE 16 – DRIVING TOOL ..... 13
FIGURE 17 - ADAPTOR ..... 13
FIGURE 18 - TORQUE CHECK GAUGE ..... 13
FIGURE 19 - EXTRACTOR ..... 14
FIGURE 20 - 'STANDARD' AND 'MAJOR' TORQUE-LIMITING SCREW DRIVER ..... 18
FIGURE 21 - TORQUE MASTER DIAL SETTING RIG ..... 18
FIGURE A1 - INSERTING TOOL NOZZLE ..... 21
FIGURE A2 - INSERTING TOOL MANDREL ..... 22
FIGURE A3 - LOCKING TORQUE GAUGE CHECK ..... 23

TABLES:

TABLE 1 - INSTALLATION DEPTH OF INSERTS ..... 9
TABLE 2 - INSTALLED LENGTHS FOR AGS3700-3799 AND U755600 SERIES INSERTS ..... 10
TABLE 3 – MINIMUM AND MAXIMUM LOCKING TORQUES ..... 12
TABLE 4 - INSERTING AND TANG BREAK-OFF TOOLS ..... 15
TABLE 5 – PART NUMBER FOR "BAL" POWER INSERTING TOOL COMPONENTS ..... 16
TABLE 6 - AIR LINE PRESSURES FOR POWER TOOLS ..... 16
TABLE 7 - TORQUE CHECK GAUGE AND ADAPTOR, AND EXTRACTION TOOLS ..... 17
TABLE 8 - DETAILS OF TORQUE-CHECKING EQUIPMENT ..... 19
TABLE A1 - NOZZLE AND MANDREL OF INSERTING TOOLS INSPECTED DIMENSIONS ..... 21
TABLE A2 - NOZZLE AND MANDREL OF INSERTING TOOLS INSPECTED DIMENSIONS ..... 22
TABLE A3 - SCREW THREAD INSPECTION DIMENSION ..... 23
TABLE B1 – RECOMMENDATIONS TO KNOWN PROBLEMS ..... 24
TABLE B1 – RECOMMENDATIONS TO KNOWN PROBLEMS (CONTINUED) ..... 25

Rolls Royce Plc
18-Sep-15
10:03:14
213424
Mathias Schuler



© Rolls-Royce Plc 2001



This document is the property of Rolls-Royce plc and may not be copied or communicated to a third party or used for any purpose other than for which it is supplied without express written authority of Rolls-Royce plc

This is an uncontrolled copy and will not be kept up to date



1 SCOPE:

1.1 This specification provides instructions for the installation of inch wire thread screw-locking and free-running inserts hereinafter referred to as inserts.

1.2 This specification contains dimensional information for the inspection of the assembly tooling and gauges for use with the above inserts.

2 REASONS FOR USE:

2.1 To ensure consistency in the installation procedure and performance of inserts.

3 APPLICABLE DOCUMENTS:

3.1 The supplier shall work to the latest revision of each document unless a specific document issue is specified. When the referenced document has been cancelled and no superseding document has been specified, the last published issue of that document shall apply.

3.2 Society of Automotive Engineers (SAE) Aerospace Recommended Practices (ARP) Aerospace Standards (AS) and Aerospace Material Specifications (AMS). Available from SAE, 400 Commonwealth Dr., Warrendale, PA 15096, USA :

SAE AS8879 Screw Threads - UNJ Profile, Inch Controlled Radius Root With Increased Minor Diameter

3.3 UK Aerospace, Defence, Security & Space (ADS) Industries documents, available from ADS Group Limited, Salamanca Square, 9 Albert Embankment, London, SE1 7SP www.adsgroup.org.uk/.

AGS3700 – 3799 - Insert – Screw Thread, Unified, Screw Locking, Helical Coil, H.R. Alloy BS HR503

RS621 - UNF Thread –Wire Section

TS 141 - Tool Definition for Insert, Screw Thread, Unified, Screw Locking Helical Coil, BS HR503

Rolls Royce Plc 18-Sep-13 10:03:14 213424 Mathias Schuller



© Rolls-Royce Plc 2001



This document is the property of Rolls-Royce plc and may not be copied or communicated to a third party or used for any purpose other than for which it is supplied without express written authority of Rolls-Royce plc

This is an uncontrolled copy and will not be kept up to date



3.4 ISO publications, available from the International Organization for Standardization (ISO) 1, ch. de la Voie-Creuse, Case postale 56 CH-1211 Geneva 20, Switzerland
www.iso.org

ISO 3161 - Aerospace -- UNJ threads -- General requirements and limit dimensions

3.5 British Standards Institute publications, available from BSI, 389 Chiswick High Road, Chiswick, London, UK

BS 3409 - Specification for the tapping of holes to receive wire thread inserts (UNC and UNF threads).

BS 919 - Specification for screw gauge limits and tolerances. Gauges for ISO metric screw threads.

3.6 Bolhoff Armstrong Ltd, Stoneferry Business Park, Foster Street Hull, HU8 8BT, UK

All BAL Part numbers

3.7 Alcoa Fastening Systems, 20 Stamford Road, Oakleigh, Victoria 3166 Australia

All RCL Part numbers

3.8 Rolls-Royce documents: available internally from the One Rolls-Royce website, and externally from www.suppliermanager-online.com

All Rolls-Royce Part numbers

RRMS 45008 - Universal Sealing Compound for Joints

4 DEFINITION OF TERMS:

4.1 None.

5 DESCRIPTION:

5.1 A wire thread insert is a helix of wire of diamond shaped cross-section which provides an internal thread of standard size when fitted in an appropriate size of threaded hole. In the free condition, its diameter is larger than that of the tapped hole and this interference retains the insert when assembled. It has one (or more) of its coils deformed to the shape of a polygon to provide a locking device for the retention of the bolt or other externally threaded component (See Figure 1). Also known as a 'helical coil insert' and has manufacturer trade name of Heli-Coil® insert.

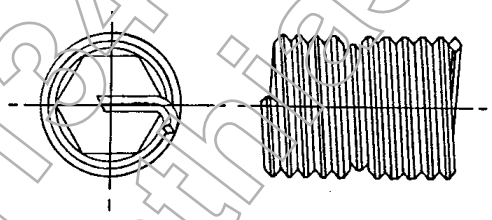

FIGURE 1 – WIRE THREAD INSERT

5.2 The diamond section of the wire conforms to ADS Spec RS621, which allows bolts with class 3A threads to SAE AS8879 or ISO 3161 to be installed in the insert.

Rolls-Royce Plc 18-Sep-15 10:06:14 2134424 Mathias Schuller



© Rolls-Royce Plc 2001



This document is the property of Rolls-Royce plc and may not be copied or communicated to a third party or used for any purpose other than for which it is supplied without express written authority of Rolls-Royce plc

This is an uncontrolled copy and will not be kept up to date



6 ASSEMBLY PROCEDURE:

6.1 Cleaning out of tapped holes:

6.1.1 Tapped holes shall be thoroughly cleaned out. All grease and swarf shall be completely removed to enable the holes to be gauged and to enable the inserts to be seated correctly.

6.1.2 Conventional type compressed air guns are not considered adequate for this cleaning operation, but elongated nozzles with radial openings are required to blow swarf from the bottom to the top of the thread in blind holes.

6.2 For additional preparation for Magnesium and Aluminium parts, see Figure 2.

**Diagram**

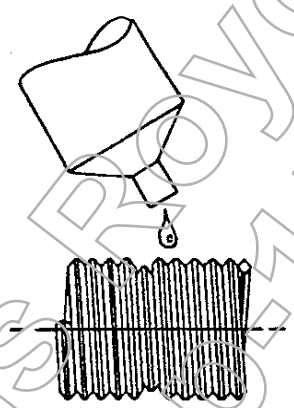

**Operation**

Inserts intended to be installed into magnesium and aluminium parts shall be smeared with a barrier material to prevent electrolytic corrosion. Barrier material per RRMS 45008 shall be used unless otherwise specified on the Component Definition.

Alternatively, the barrier material may be lightly smeared into the top of the threaded hole **prior** to insert installation. Avoid excessive barrier material since it may cause problems at the bottom of a blind hole. If excessive barrier material is present in the blind hole after insert installation, it shall be removed.

FIGURE 2 - ADDITIONAL PREPARATION FOR MAGNESIUM AND ALUMINIUM

6.3 Inserting tools with stepped threaded driving mandrels in accordance with Figure 3 and Table 4 shall be used. No other tools shall be used for the assembly of these inserts. The use of incorrect tools causes overstressing of the inserts, loss of spring resilience or premature tang break-off resulting in movement of the insert in the tapped hole when the mating bolt or other externally threaded component is installed.

6.3.1 Prior to the installation of an insert into the tool, the threaded mandrel and tool nozzle shall be cleaned and lubricated with oil. The oil used shall be clean engine oil i.e., any recognized oils used in the engine lubrication system. If in doubt, consult the controlling quality engineer.

6.3.2 When using inserts coated with Dry Film Lubricant (DFL) the inserting tools may become clogged or contaminated with DFL residue. Ethyl acetate, toluene or xylene can be used to scrub off DFL residue after soaking.

6.4 Warning for Cadmium/Titanium contamination:

6.4.1 Care shall be exercised to prevent the transfer of cadmium particles from one component to a second by tooling. Particles of cadmium deposited directly or indirectly onto titanium can, at elevated temperatures, cause hardening and subsequent embrittlement of titanium with possible subsequent failure. Therefore, components constructed of titanium or titanium alloys shall not come into contact directly or indirectly with cadmium, or other low melting point plated tools, equipment or other cadmium plated components.

Rolls Royce Plc 18-Sep-15 10:03:14 21424 Matthias Schuller



© Rolls-Royce Plc 2001



This document is the property of Rolls-Royce plc and may not be copied or communicated to a third party or used for any purpose other than for which it is supplied without express written authority of Rolls-Royce plc

This is an uncontrolled copy and will not be kept up to date



6.5 Sequence of operations:

FIGURE 3 – TYPICAL INSERTING TOOL

Note - For tool part numbers, refer to Table 4

OPERATION

Clean the threaded mandrel with a fine bristle brush. Apply clean oil to the tool nose and threaded mandrel. This prolongs the tool life.

Withdraw the threaded mandrel and place the insert in the loading chamber with the tang end of the insert towards the nozzle. See Figure 4.

With the thumb, prevent the insert from moving and rotate the threaded mandrel clockwise until the driving feature engages the insert tang. See Figure 5

Rotate the mandrel clockwise and push forward **gently** until the insert locates the thread in the tool nozzle. Continue winding the insert into the nozzle until the insert is about to emerge from the open end. See Figure 6.

Place the loaded tool squarely over the tapped hole in the component, which is to receive the insert and rotate the mandrel clockwise until the insert is at the required depth. See Figure 7.

DIAGRAM

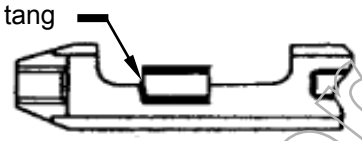


FIGURE 4 – ADDING INSERT TO LOADING CHAMBER

FIGURE 5 – ENGAGE DRIVING FEATURE

FIGURE 6 – WINDING OF INSERT

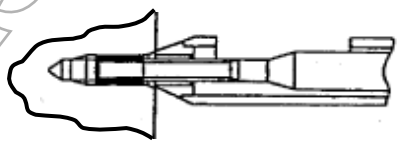

FIGURE 7 – SEAT INSERT

6.5.1 Rotate the mandrel anti-clockwise until it is clear of the insert. Resistance of the locking feature will be felt as the mandrel is withdrawn from the insert.

6.5.2 To achieve the required depth below the surface, set the collar (if fitted) on the mandrel of the inserting tool to the prescribed dimension on the drawing.



© Rolls-Royce Plc 2001



This document is the property of Rolls-Royce plc and may not be copied or communicated to a third party or used for any purpose other than for which it is supplied without express written authority of Rolls-Royce plc

Rolls-Royce Plc 18-Sep-15 10:03:14 2153424 Mathias Schuler

This is an uncontrolled copy and will not be kept up to date



6.6 Power inserting tool:

6.6.1 Power tools work in exactly the same manner as the inserting tool shown in Figure 3 except the power assistance for rotating the mandrel yields a quicker insert installation. These tools should be limited in rpm to prevent wear and heat generation during installation. See Table 4 for the tools currently approved for use. The mandrel and nozzle dimensions are the same as for the conventional inserting tools, and shall be inspected for wear, etc and cleaned in a similar manner. Table 5 lists power inserting tool components for replacement.

6.6.2 **Air powered tools can be damaged by excessive air line pressure. Refer to Table 6 for pressure limits for the tool required for the insert being installed.**

6.7 Wear of assembly tools and inspection gauges may lead to non-conformance of assembled inserts. All tools and gauges shall be periodically inspected. For inspection of installation tooling, refer to Appendix A.

6.8 Tang break-off:

6.8.1 The tang shall be removed as soon as possible after installation of the insert. In case of through holes, it is essential that the broken tang shall not fall through and become trapped inside equipment. This is particularly critical where rectification or repair is carried out on built up equipment or assemblies. Refer to Figures 8 and 9.

| OPERATION | DIAGRAM | TOOL REFERENCE |
|---|---|---|
| Place the tool into the assembled insert, and allow it to rest on the tang as shown.<br>Hold the sleeve firmly and deliver a sharp hammer blow using a 170-230g hammer on the punch at **A**. The tang will break off cleanly at the notch.<br><br>An automatic tang break off tool may be used instead. If standard tooling is not used, alternatives may be used providing that the tang is broken off cleanly and the insert is not dislodged from the parent component thread. | 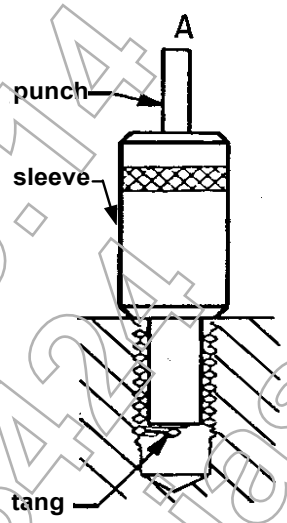 <br>FIGURE 8 – BREAK OFF TANG | For tool part numbers refer to Table 4. |

Rolls-Royce plc
18-Sep-19
10:03:14
213424
Mathias Schuler



© Rolls-Royce Plc 2001
This document is the property of Rolls-Royce plc and may not be copied or communicated to a third party or used for any purpose other than for which it is supplied without express written authority of Rolls-Royce plc

This is an uncontrolled copy and will not be kept up to date



6.9 Retrieval of tang:

| OPERATION | DIAGRAM | TOOL REFERENCE |
|---|---|---|
| The free tang shall be removed from the component immediately after break-off.<br><br>All tangs to be accounted for with reference to number of inserts installed. | | Tweezers or vacuum probes |

FIGURE 9 – REMOVE TANG

6.10 Insert Installation Depth

6.10.1 The insert shall be installed to a depth per Figure 10, unless otherwise specified on the Component Definition.

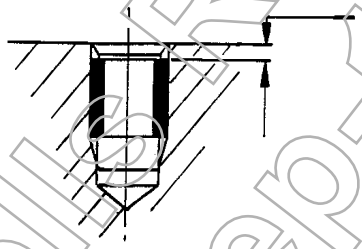


FIGURE 10 – INSTALL DEPTH

6.10.2 The interpretation of the installation depth per Figure 11.

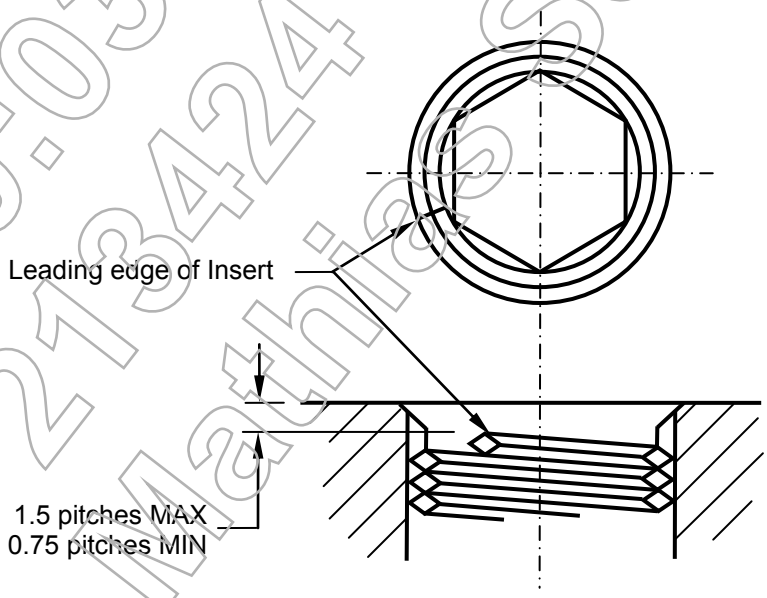


FIGURE 11 – INSTALL DEPTH INTERPRETATION



© Rolls-Royce Plc 2001



This document is the property of Rolls-Royce plc and may not be copied or communicated to a third party or used for any purpose other than for which it is supplied without express written authority of Rolls-Royce plc

Rolls-Royce Plc 18-Sep-15 10:03:14 213424 Mathias Schuler

This is an uncontrolled copy and will not be kept up to date



TABLE 1 - INSTALLATION DEPTH OF INSERTS

| NOMINAL THREAD SIZE INCHES | 0.75P MIN DEPTH mm | 1.5P MAX DEPTH mm |
|---|---|---|
| .1900-32 | 0.58 | 1.19 |
| 2500-28 | 0.69 | 1.37 |
| .3125-24 | 0.79 | 1.57 |
| .3750-24 | 0.79 | 1.57 |
| .4375-20 | 0.97 | 1.90 |
| .5000-20 | 0.97 | 1.90 |
| .5625-18 | 1.04 | 2.11 |
| .6250-18 | 1.04 | 2.11 |
| .7500-16 | 1.19 | 2.39 |
| .8750-14 | 1.37 | 2.72 |
| 1.000-12 | 1.57 | 3.18 |

7 INSPECTION OF ASSEMBLED INSERT:

7.1 Length of fitted insert: For interpretation of depth control see Figure 12.

| OPERATION | DIAGRAM | INSERT INFORMATION |
|---|---|---|
| Check installed depth below surface. See Section 6.11. | 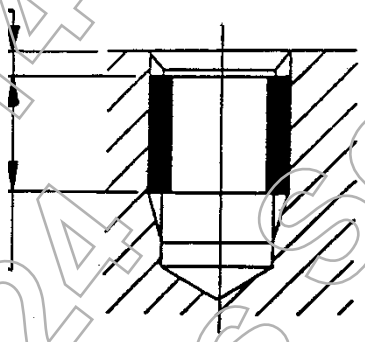 | |
| Check installed length of insert to ensure that a shorter insert has not been fitted | | Installed lengths of AGS3700-3799 inserts are given together with part numbers in Table 2. |

FIGURE 12 – INSPECTION OF ASSEMBLED INSERT

Rolls Royce Plc
16-Sep-15
10:03:14
213424
Mathias Schuller



© Rolls-Royce Plc 2001



This document is the property of Rolls-Royce plc and may not be copied or communicated to a third party or used for any purpose other than for which it is supplied without express written authority of Rolls-Royce plc

This is an uncontrolled copy and will not be kept up to date



TABLE 2 - INSTALLED LENGTHS FOR AGS3700-3799 AND U755600 SERIES INSERTS

| SILVER COATED INSERT PART NO | DFL COATED INSERT PART NO | INSERT SIZE INCHES | INSTALLED LENGTH mm |
|---|---|---|---|
| AGS3706 | U755606 | .1900-32 X 1D | 4.30 ± 0.10 |
| AGS3707 | U755607 | .2500-28 X 1D | 5.80 ± 0.10 |
| AGS3708 | U755608 | .3125-24 X 1D | 7.30 ± 0.15 |
| AGS3709 | U755609 | .3750-24 X 1D | 8.90 ± 0.10 |
| AGS3710 | U755610 | .4375-20 X 1D | 10.30 ± 0.15 |
| AGS3711 | U755611 | .5000-20 X 1D | 11.90 ± 0.15 |
| AGS3731 | U755631 | .1900-32 X 1.5D | 6.80 ± 0.10 |
| AGS3732 | U755632 | .2500-28 X 1.5D | 8.90 ± 0.10 |
| AGS3733 | U755633 | .3125-24 X 1.5D | 11.30 ± 0.15 |
| AGS3734 | U755634 | .3750-24 X 1.5D | 13.60 ± 0.15 |
| AGS3735 | U755635 | .4375-20 X 1.5D | 15.90 ± 0.15 |
| AGS3736 | U755636 | .5000-20 X 1.5D | 18.20 ± 0.15 |
| AGS3756 | U755656 | .1900-32 X 2D | 9.15 ± 0.10 |
| AGS3757 | U755657 | .2500-28 X 2D | 12.20 ± 0.10 |
| AGS3758 | U755658 | .3125-24 X 2D | 15.20 ± 0.15 |
| AGS3759 | U755659 | .3750-24 X 2D | 18.35 ± 0.15 |
| AGS3760 | U755660 | .4375-20 X 2D | 21.45 ± 0.15 |
| AGS3761 | U755661 | .5000-20 X 2D | 24.60 ± 0.15 |
| AGS3781 | U755681 | .1900-32 X 2.5D | 11.61 ± 0.10 |
| AGS3782 | U755682 | .2500-28 X 2.5D | 15.30 ± 0.10 |
| AGS3783 | U755683 | .3125-24 X 2.5D | 19.20 ± 0.15 |
| AGS3784 | U755684 | .3750-24 X 2.5D | 23.15 ± 0.15 |
| AGS3785 | U755685 | .4375-20 X 2.5D | 27.00 ± 0.15 |
| AGS3786 | U755686 | .5000-20 X 2.5D | 31.00 ± 0.15 |
| AGS3718 | U755618 | .1900-32 X 3D | 14.00 ± 0.10 |
| AGS3719 | U755619 | .2500-28 X 3D | 18.50 ± 0.10 |
| AGS3720 | U755620 | .3125-24 X 3D | 23.15 ± 0.15 |
| AGS3721 | U755621 | .3750-24 X 3D | 27.90 ± 0.15 |
| AGS3722 | U755622 | .4375-20 X 3D | 32.50 ± 0.15 |
| AGS3723 | U755623 | .5000-20 X 3D | 37.30 ± 0.15 |

7.2 Screw thread:

7.2.1 When installed in a hole tapped to the requirements of BS 3409, the insert shall accept male threads to both SAE AS8879 and ISO 3161 and the pitch diameter '**GO**' gauge shall enter to the depth of the friction element as specified on the insert drawing.

7.3 Locking torque:

7.3.1 It is not normally considered necessary for the locking torque of the installed insert to be checked, as it removes one of the "lives" of the insert. However, if the controlling quality/manufacturing engineering area is uncertain as to the consistent quality of insert



© Rolls-Royce Plc 2001



This document is the property of Rolls-Royce plc and may not be copied or communicated to a third party or used for any purpose other than for which it is supplied without express written authority of Rolls-Royce plc

This is an uncontrolled copy and will not be kept up to date



installations, this section specifies the procedure to be followed to check the locking torque. Such areas may wish to adopt a statistically based sampling plan, and this sampling could then be reduced with increasing confidence in the insert installations being obtained. Refer to Figures 13 to 18.

7.3.2 Table 3 provides the maximum locking torques permissible for installed inserts. This may be of use where inserts appear to exhibit unusually high levels of locking torque, and could be assessed by setting the driving tool to slip at the maximum value. If the tool slips when the locking element is engaged the insert must be removed and replaced by a new one.

| OPERATION | DIAGRAM | TOOL REFERENCE |
|---|---|---|
| Using the torque setting device pre-set the driving tool to slip at the minimum value of torque listed in Table 3. | 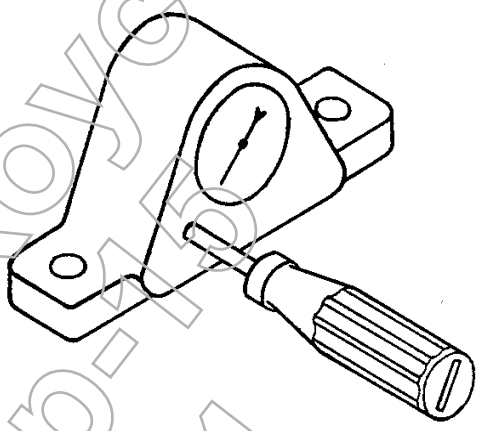 | 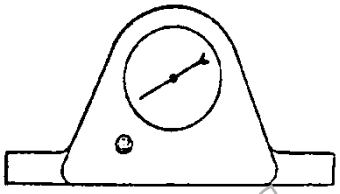 |

FIGURE 13 – USE OF TORQUE SETTING DEVICE

FIGURE 14 - MHH ENGINEERING TORQUE MASTER DIAL SETTING RIG

Refer to Table 7 for details.

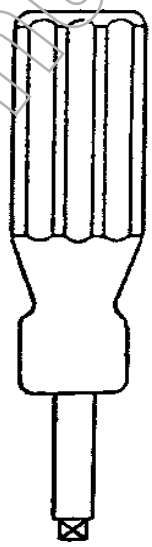

FIGURE 15 - MHH ENGINEERING TORQUE LIMITING DRIVERS

Refer to Table 7 for details.

Rolls Royce plc 18-Sep-15 10:03:14 213424 Mathias Schuler



© Rolls-Royce Plc 2001



This document is the property of Rolls-Royce plc and may not be copied or communicated to a third party or used for any purpose other than for which it is supplied without express written authority of Rolls-Royce plc

This is an uncontrolled copy and will not be kept up to date



TABLE 3 – MINIMUM AND MAXIMUM LOCKING TORQUES

| NOMINAL THREAD SIZE INCHES | MINIMUM LOCKING TORQUE Nm | MAXIMUM LOCKING TORQUE Nm |
|---|---|---|
| .1900-32 | 0.23 | 1.92 |
| 2500-28 | 0.40 | 3.95 |
| .3125-24 | 0.73 | 8.13 |
| .3750-24 | 1.07 | 10.85 |
| .4375-20 | 1.58 | 13.60 |
| .5000-20 | 2.03 | 20.30 |
| .5625-18 | 2.71 | 27.10 |
| .6250-18 | 3.62 | 40.70 |
| .7500-16 | 5.65 | 54.24 |
| .8750-14 | 7.91 | 81.36 |
| 1.0000-12 | 10.40 | 108.47 |

Rolls Royce Plc
18-Sep-15
10:03:14
213424
Mathias Schuler



© Rolls-Royce Plc 2001



This document is the property of Rolls-Royce plc and may not be copied or communicated to a third party or used for any purpose other than for which it is supplied without express written authority of Rolls-Royce plc

This is an uncontrolled copy and will not be kept up to date



OPERATION

Adapt the driving tool to suit the appropriate torque check gauge and ensure that the insert locking torque is greater than the pre-set value; this will be experienced by a sudden slipping of the tool as the gauge enters the insert locking element.

If the tool does not slip after the locking element has been engaged the insert must be removed and replaced by a new one.

Where a torque limiting driver is not available the minimum torque may be checked by a suitable calibrated torque wrench applied to the torque check gauge.

The maximum locking torque will not normally be checked but if the check is required the drawing will specify the appropriate value (also refer to Table 3). In this event the torque-checking tool should be set at the figure specified on the drawing (or Table 3) and if the tool slips when the locking element is engaged the insert must be removed and replaced by a new one.

DIAGRAM

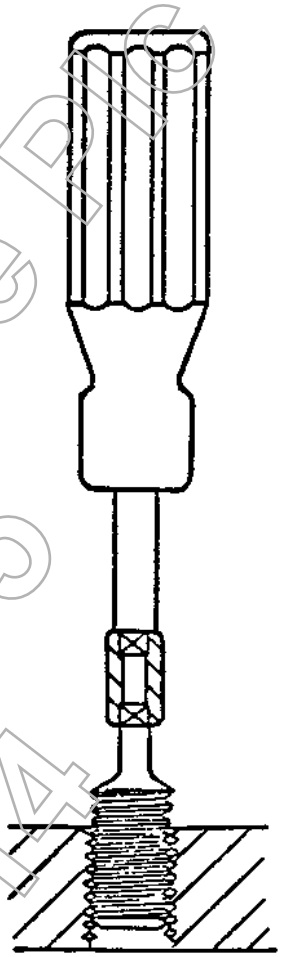

FIGURE 16 – DRIVING TOOL

TOOL REFERENCE

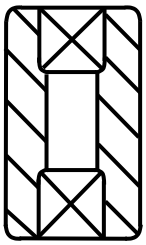

FIGURE 17 - ADAPTOR

See Table 6 for part numbers

FIGURE 18 - TORQUE CHECK GAUGE

See Table 6 for part numbers and Appendix A for dimensions

7.4 Gauges:

7.4.1 Screw thread gauging shall meet the requirements of BS 919 or equivalent.

8 EXTRACTION OF INSERTS:

8.1 If an insert has to be replaced, an extraction tool as defined in Table 7 should be used as described in Figure 19.

8.1.1 The extraction tool (See Figure 19) is designed to generate driving slots in the uppermost coil of the insert when the hammer is applied to the top of the tool. These slots are used to key into the insert and enable it to be unscrewed from the parent thread.

Caution - Extreme care should be exercised when removing an insert which has been installed below the recommended depth. This is especially pertinent with the two bladed

Rolls-Royce Plc 18:05:15 10:05:14 213424 Mathias Schuller



© Rolls-Royce Plc 2001



This document is the property of Rolls-Royce plc and may not be copied or communicated to a third party or used for any purpose other than for which it is supplied without express written authority of Rolls-Royce plc

This is an uncontrolled copy and will not be kept up to date



extraction tool. To prevent damage to the parent material when this occurs, other methods of insert removal may be employed.

8.2 Power extraction tools are not recommended but if they are used the speed should be limited to 100 rpm to prevent damage to the tapped hole.

| OPERATION | DIAGRAM |
|---|---|
| End of insert wire must not coincide with sharp edge of the extraction tool.<br><br>Apply the extraction tool. Lightly tap with 170-230g hammer, then rotate counter-clockwise to withdraw the insert.<br><br>Extracted inserts shall be scrapped and under no circumstances shall they be subsequently reassembled.<br><br>The tapped hole must be checked for cleanliness and re-gauged before a replacement insert is fitted. | 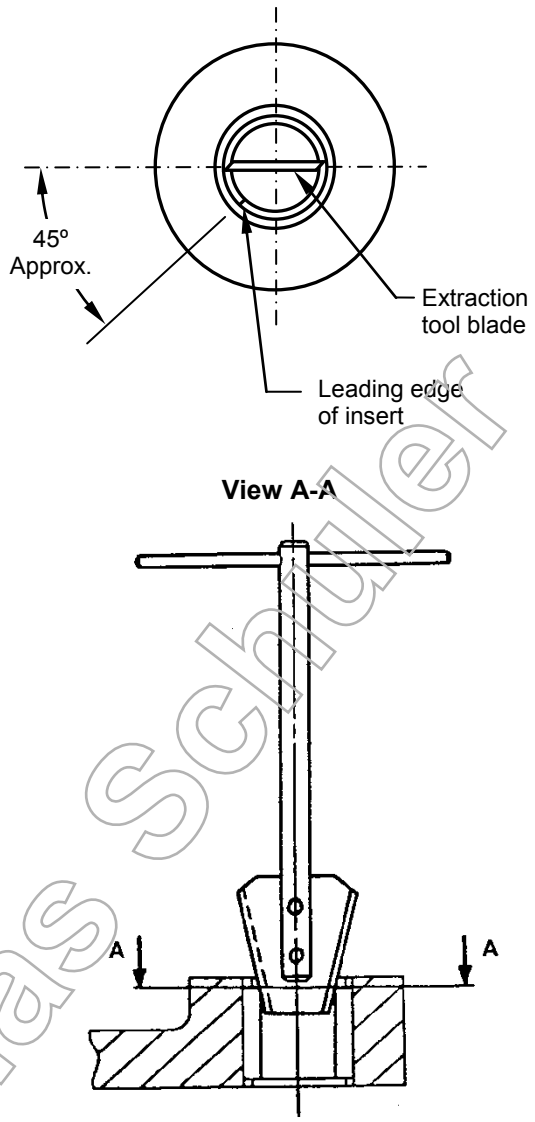 <br>FIGURE 19 - EXTRACTOR |

Rolls Royce Plc 18-Sep-15 10:03:14 213424 Mathias Schuler



© Rolls-Royce Plc 2001
This document is the property of Rolls-Royce plc and may not be copied or communicated to a third party or used for any purpose other than for which it is supplied without express written authority of Rolls-Royce plc

This is an uncontrolled copy and will not be kept up to date



TABLE 4 - INSERTING AND TANG BREAK-OFF TOOLS

| Tool | Inserting tool 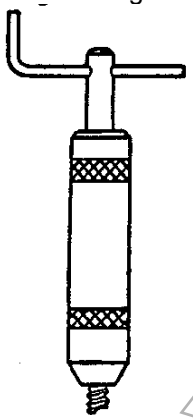 | | | Power Inserting tool 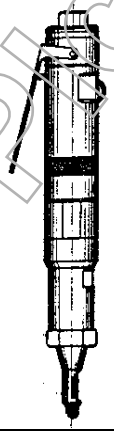 | | Tang break-off tool | | |
|---|---|---|---|---|---|---|---|---|
| **Purpose** | **For installing inserts** | | | **Alternative method for installing inserts** | | **For removing tang** | | |
| **Nominal Thread Size Inches** | **BAL Part No.** | **RCL Part No.** | **RR Part No.** | **BAL Part No.** | **RCL Part No.** | **Manual BAL Part No.** | **Auto BAL Part No.** | **RR Part No.** |
| .1900-32 | ST1062 | 54601-1 | 726577 | 719001392# | 5460004 + NR-HL1410 | 3581-3 (-3) | 01586040000 | 726036 |
| | -- | -- | -- | 719001390 | 5460002 + NR-HL1410♦ | -- | | -- |
| .2500-28 | ST1088 | 54041-1 | 726578 | 719001407# | 5404004 + NR-HL1410 | 3581-4 (-3) | 01586060000 | 726037 |
| | -- | -- | -- | 719001408 | 5404006 + NR-HL1410■ | -- | | -- |
| .3125-24 | ST1089 | 54051-1 | 726579 | 719001501 | 5405004 + NR-HL1410 | 3581-5 (-3) | 01586080000 | 726038 |
| .3750-24 | ST1090 | 54061-1 | 726580 | 719001601 | 5406004 + NR-HL1410 | 3581-6 (-3) | 01586090000 | 726039 |
| .4375-20 | ST1091 | * | 726581 | * | * | 3581-7 (-3) | 01586110000 | 726040 |
| .5000-20 | ST1092 | * | 726582 | * | * | 3581-8 (-3) | 01586120000 | 726041 |
| .5625-18 | ST1130 | * | * | * | * | 1196-9 (-3) | 01586140000 | 726042 |
| .6250-18 | ST1099 | * | * | * | * | 1196-9 (-3) | 01586160000 | 726043 |
| .7500-16 | * | * | * | * | * | 1196-12 (-3) | | 726044 |
| .8750-14 | * | * | * | * | * | * | | * |
| 1.0000-12 | * | * | * | * | * | * | | * |

♦ For use in deep counterbored holes.
* Tools not available at the time of printing
\# Tape feed mandrel assembly
■ Double ramped Mandrel

RR = Rolls-Royce plc
RCL = Alcoa Fastening systems
BAL = Bollhoff Armstrong Ltd.

Rolls Royce Plc 10-05-14 21:34:24 Mathias Schuller

U.S. Export Controlled

Rolls-Royce Proprietary



© Rolls-Royce Plc 2001
This document is the property of Rolls-Royce plc and may not be copied or communicated to a third party or used for any purpose other than for which it is supplied without express written authority of Rolls-Royce plc

This is an uncontrolled copy and will not be kept up to date



TABLE 5 – PART NUMBER FOR “BAL” POWER INSERTING TOOL COMPONENTS

| COMPLETE TOOL PART NUMBER | Nominal Thread Size Inches | STYLE | AIR MOTOR | ADAPTOR | PRE-WINDER | MANDREL | SPACER SET |
|---|---|---|---|---|---|---|---|
| 719001392 | .1900-32 | TAPE FEED | 01603700010 | 719025102 | 719061148 | 719041148 | 719080848 |
| 719001390 | .1900-32 | BULK | 01603700010 | 719025102 | 719061147 | 719041147 | 719080847 |
| 719001407 | .2500-28 | TAPE FEED | 01603700010 | 719025102 | 719061461 | 719041447 | 719081245 |
| 719001408 | .2500-28 | BULK | 01603700010 | 719025102 | 719061444 | 719041446 | 719081244 |
| 719001501 | .3125-24 | BULK | 01601800010 | 01601800040 | 719060566 | 719041156 | 719080825 |
| 719001601 | .3750-24 | BULK | 01601800010 | 01601800040 | 719060571 | 719041031 | 719080830 |

TABLE 6 - AIR LINE PRESSURES FOR POWER TOOLS

| TOOL PART NO | INSERT SIZE Inches | REQUIRED PRESSURE kPa |
|---|---|---|
| 719001392 & 719001390 | .1900-32 | 240 - 280 |
| 5460004 & 5460002 | .1900-32 | 240 - 310 |
| 719001407 & 719001408 | .2500-28 | 280 - 350 |
| 5404004 & 5404006 | .3125-24 | 350 - 410 |
| 719001501 & 5405004 | .3750-24 | 410 - 480 |

Rolls-Royce plc
18-Sep-15
10:03:14
213424
Mathias Schuller



© Rolls-Royce Plc 2001



This document is the property of Rolls-Royce plc and may not be copied or communicated to a third party or used for any purpose other than for which it is supplied without express written authority of Rolls-Royce plc

This is an uncontrolled copy and will not be kept up to date



TABLE 7 - TORQUE CHECK GAUGE AND ADAPTOR, AND EXTRACTION TOOLS

| Tool | Torque check gauge | Adaptor 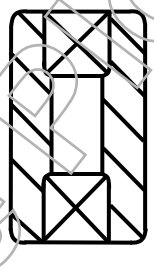 | Alternative extraction tools 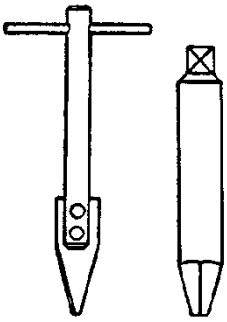 | | |
|---|---|---|---|---|---|
| **Purpose** | **To check for minimum locking torque** | **To adapt torque check gauge to driver** | **To remove defective inserts** | | |
| **Nominal Thread Size Inches** | **RR Part No** | **RR Part No** | **BAL Part No** | **RR Part No** | **RR Part No** |
| .1900-32 | This gauge is available under various part numbers depending on the Rolls-Royce site, all of which are permissible. Refer to Appendix A for the essential dimensions for this gauge. | HC21743 | 01805010000 | 722242 | HC22913 |
| .2500-28 | | HC21743 | 01805010000 | 722242 | HC22914 |
| .3125-24 | | HC21743 | 01805020000 | 722242 | HC22914 |
| .3750-24 | | HC21743 | 01805020000 | 722242 | HC22915 |
| .4375-20 | | HC21743 | 01805020000 | 722243 | * |
| .5000-20 | | HC21743 | 01805020000 | 722243 | * |
| .5625-18 | | HC21743 | 01805020000 | 722243 | HC22925 |
| .6250-18 | | HC21743 | | 722243 | * |
| .7500-16 | | HC21743 | | 722243 | * |
| .8750-14 | | HC21743 | | 722243 | * |
| 1.0000-12 | | HC21743 | | 722243 | * |

* Tools not available at time of printing.

Rolls-Royce plc
18-Sep-15
10:03:14
213424
Mathias Schaller



© Rolls-Royce Plc 2001



This document is the property of Rolls-Royce plc and may not be copied or communicated to a third party or used for any purpose other than for which it is supplied without express written authority of Rolls-Royce plc

This is an uncontrolled copy and will not be kept up to date



9 TORQUE CHECKING EQUIPMENT:

9.1 Rolls-Royce and MHH Engineering part numbers for the torque checking equipment are provided in Table 8. Refer to Figures 20 and 21 for typical torque checking tools.

FIGURE 20 - 'STANDARD' AND 'MAJOR' TORQUE-LIMITING SCREW DRIVER

FIGURE 21 - TORQUE MASTER DIAL SETTING RIG

Rolls Royce plc 18-Sep-15 10:03:14 213424 Mathias Schuler



© Rolls-Royce Plc 2001



This document is the property of Rolls-Royce plc and may not be copied or communicated to a third party or used for any purpose other than for which it is supplied without express written authority of Rolls-Royce plc

This is an uncontrolled copy and will not be kept up to date



TABLE 8 - DETAILS OF TORQUE-CHECKING EQUIPMENT

| Setting Rigs | | | | | | | |
|---|---|---|---|---|---|---|---|
| Order Code | Model* | ISO Range | Accuracy | Imperial Range | Accuracy | Drive | Weight (kgs) |
| 58130 | **MTS 400** | 0.8-4 N.m | 0.05 N.m | 7-36 lbf.in | 0.5 lbf.in | 1/4" Hex M,1/4" Square | 3.2 |
| 58140 | **MTS 1200** | 2.4-12 N.m | 0.2 N.m | 24-120 lbf.in | 2 lbf.in | 1/4" Square, 3/8" Square | 3.2 |
| **Torque Drivers** | | | | | | | |
| Order Code | Model* | ISO Range | Imperial Range | Drive (Male) | Overall | Weight (gms) | Color |
| 15540 | **Standard SD** | 6-406 cN.m | 0.5-36 lbf.in | 1/4" Square M | 159 | 280 | Red |
| 15900 | **TLS 1360 SD** | 1-13.6 N.m | 10-120 lbf.in | 1/4" Square M | 168 | 325 | Black |

* MHH Engineering LTD, Bramley, Guildford, Surrey, UK

10 NOTES:

10.1 Marginal Indicia:

10.1.1 Revision bars indicate changes from the previous issue of this specification and are located in the left margin.

10.2 Heli-Coil is a registered trademark of Emhart® Teknologies, Inc.

| ISSUE | CHANGE (ESC) NUMBER | CHANGE SUMMARY (IN DESCENDING ORDER) | DATE |
|---|---|---|---|
| B | ESC500018510124 | – Added a default barrier material (jointing compound) when installing in dissimilar materials<br>– Installation depth will default specified in this Spec unless otherwise stated on drawings<br>– Added caution note about potential risk of contamination from Cadmium coated tools<br>– Add DFL coated inserts (U7556XX)<br>– Update/add tooling part numbers<br>– Other misc. corrections and tech editing | 21 May 13 |
| A | ESC500017541123 | - Table 3 .3125-24 change the maximum locking torque from 813 to 8.13.<br>- Format updates | 11 Jan 13 |
| Initial | - | | 02 Jul 09 |

Rolls Royce Plc
18-Sep-15
10:03:14
213422
Matthias Schuler



© Rolls-Royce Plc 2001



This document is the property of Rolls-Royce plc and may not be copied or communicated to a third party or used for any purpose other than for which it is supplied without express written authority of Rolls-Royce plc

This is an uncontrolled copy and will not be kept up to date



## APPENDIX A – INSPECTION OF TOOLING

A1 INSERTING TOOLS:

A1.1 For the inspection of new tooling, refer to ADS specification TS141.

A1.2 The nozzle and mandrel of inserting tools shall be inspected to the dimensions in Figure A1 and Table A1 and Figure A2 and Table A2 respectively. When the nozzle and/or mandrel are worn outside of these limits, the tool shall be replaced.

A1.3 The rate of wear of tooling is highly dependant on the insert coating and assembly conditions. The inspection period shall therefore be timed accordingly to these factors. For full control and to prevent use of worn tooling, it is suggested that these tools be considered as calibrated equipment using dated calibration labels.

A1.4 It will be appreciated that certain aspects of the mandrel after being subjected to use will be virtually impossible to measure. This remark is principally directed at the tang drive face whose sharp edge will become rounded. It will therefore become a matter of judgement to determine whether rounding or slight damage sustained in use will impair the continued effective use of the tool.

A2 LOCKING TORQUE CHECK GAUGE:

A2.1 The screw thread on this gauge shall be inspected to the dimensions in Table A3 and Figure A3. When the gauge is worn outside of these limits, it shall be replaced.

Rolls Royce Plc
18-Sep-15
10:03:14
213424
Mathias Schuller



© Rolls-Royce Plc 2001



This document is the property of Rolls-Royce plc and may not be copied or communicated to a third party or used for any purpose other than for which it is supplied without express written authority of Rolls-Royce plc

This is an uncontrolled copy and will not be kept up to date



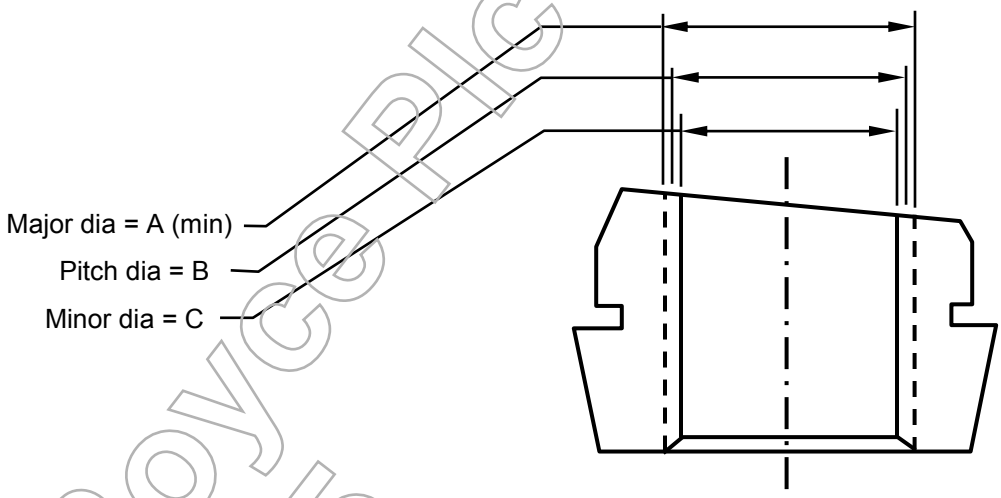


FIGURE A1 - INSERTING TOOL NOZZLE

TABLE A1 - NOZZLE AND MANDREL OF INSERTING TOOLS INSPECTED DIMENSIONS

| | INSERT THREAD SIZE | | | | | | | |
|---|---|---|---|---|---|---|---|---|
| | .1900-32 | .2500-28 | .3125-24 | .3750-24 | .4375-20 | .5000-20 | .5625-18 | .6250-18 |
| A (major dia.) | .2306 | .2964 | .3666 | .4291 | .5025 | .5650 | .6347 | .6972 |
| B (Pitch dia.) | .2163#<br>.2103 | .2795#<br>.2732 | .3473#<br>.3395 | .4099#<br>.4020 | .4784#<br>.4700 | .5411#<br>.5325 | .6075#<br>.5986 | .6701#<br>.6611 |
| C (Minor dia.) | .204#<br>.197 | .267#<br>.258 | .332#<br>.322 | .394#<br>.384 | .460#<br>.449 | .522#<br>.511 | .586#<br>.575 | .648#<br>.637 |

Note – All dimensions are in Inches

# This dimension includes a wear allowance and shall not be used to inspect **new** nozzles.

Rolls Royce Plc
10-Sep-15
10:05:14
213424
Mathias Semler



© Rolls-Royce Plc 2001
This document is the property of Rolls-Royce plc and may not be copied or communicated to a third party or used for any purpose other than for which it is supplied without express written authority of Rolls-Royce plc

This is an uncontrolled copy and will not be kept up to date



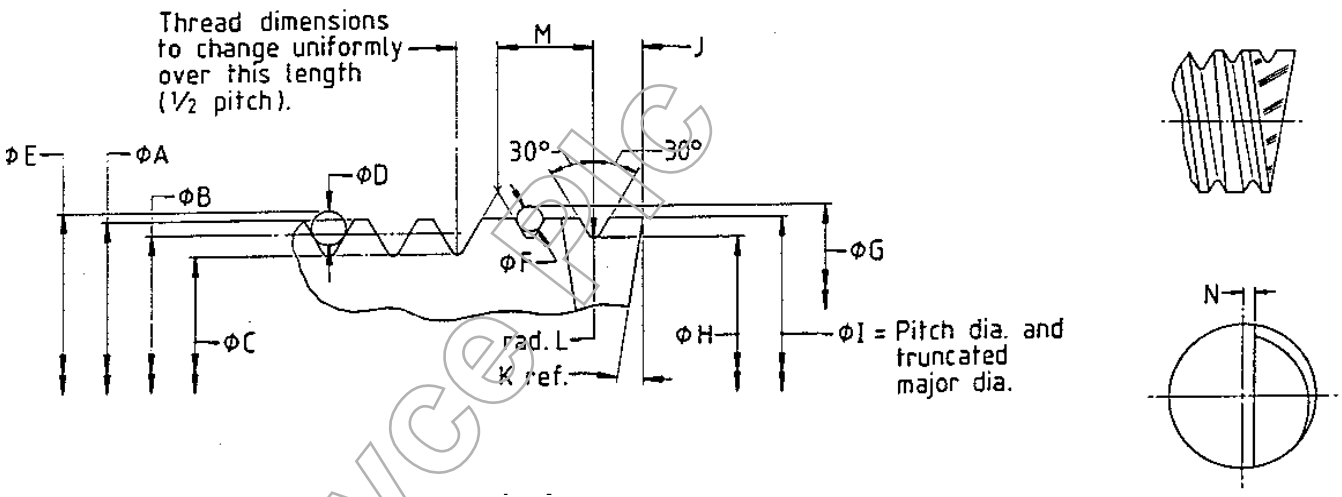


FIGURE A2 - INSERTING TOOL MANDREL

TABLE A2 - NOZZLE AND MANDREL OF INSERTING TOOLS INSPECTED DIMENSIONS

| | | SCREW THREAD SIZE | | | | | | | |
|---|---|---|---|---|---|---|---|---|---|
| | | .1900-32 | .2500-28 | .3125-24 | .3750-24 | .4375-20 | .5000-20 | .5625-18 | .6250-18 |
| A | MAJOR ∅ TRUNCATED | .1667<br>.1617# | .2228<br>.2168# | .2804<br>.2734# | .3429<br>.3359# | .4000<br>.3930# | .4625<br>.4555# | .5214<br>.5144# | .5839<br>.5769# |
| B | PITCH ∅ | .1528<br>.1478# | .2085<br>.2025# | .2745<br>.2675# | .3295<br>.3225# | .3880<br>.3810# | .4515<br>.4445# | .5105<br>.5035# | .5677<br>.5607# |
| C | MINOR ∅ MAX | .1348 | .1879 | .2504 | .3055 | .3592 | .4227 | .4784 | .5356 |
| D | MEASURING WIRES | .01804 | .02406 | .02406 | .02406 | .02887 | .02887 | .0289 | .0289 |
| E | OVER 3 WIRES | .1799<br>.1749# | .2497<br>.2437# | .3106<br>.3036# | .3656<br>.3566# | .4313<br>.4243# | .4948<br>.4878# | .5491<br>.5421# | .6063<br>.6293# |
| F | MEASURING WIRES | .01419 | .01604 | .02067 | .02067 | .02062 | .02062 | .0289 | .0289 |
| G | OVER 3 WIRES | .1822<br>.1772# | .2400<br>.2340# | .3063<br>.2993# | .3688<br>.3618# | .4186<br>.4116# | .4811<br>.4741# | .5600<br>.5530# | .6225<br>.6155# |
| H | MINOR ∅ MAX | .1487 | .2022 | .2564 | .3189 | .3712 | .4337 | .4893 | .5518 |
| I | PITCH ∅ | .1667<br>.1617# | .2228<br>.2168# | .2804<br>.2734# | .3429<br>.3359# | .4000<br>.3930# | .4625<br>.4555# | .5214<br>.5144# | .5839<br>.5769# |
| J | MAX<br>MIN | .0235<br>.0195 | .0268<br>.0223 | .0313<br>.0260 | .0313<br>.0260 | .0375<br>.0313 | .0375<br>.0313 | .0471<br>.0347 | .0375<br>.0347 |
| K | REF | 8° | 7° | 8 1/2° | 7° | 7° | 6° | 6° | 5 1/2° |
| L | RAD. MAX | .0045 | .0051 | .0060 | .0060 | .0072 | .0072 | .0080 | .0080 |
| M | MAX<br>MIN | .0469<br>.0312 | .0536<br>.0357 | .0625<br>.0417 | .0625<br>.0417 | .0750<br>.0500 | .0750<br>.0500 | .1389<br>.1111 | .1389<br>.1111 |
| N | MAX<br>MIN | .025<br>.015 | .027<br>.025 | .033<br>.030 | .034<br>.030 | .040<br>.036 | .041<br>.037 | .045<br>.041 | .046<br>.042 |

*Note – All dimensions are in inches

# This dimension includes a wear allowance and shall not be used to inspect new mandrels.



© Rolls-Royce Plc 2001



This document is the property of Rolls-Royce plc and may not be copied or communicated to a third party or used for any purpose other than for which it is supplied without express written authority of Rolls-Royce plc

This is an uncontrolled copy and will not be kept up to date



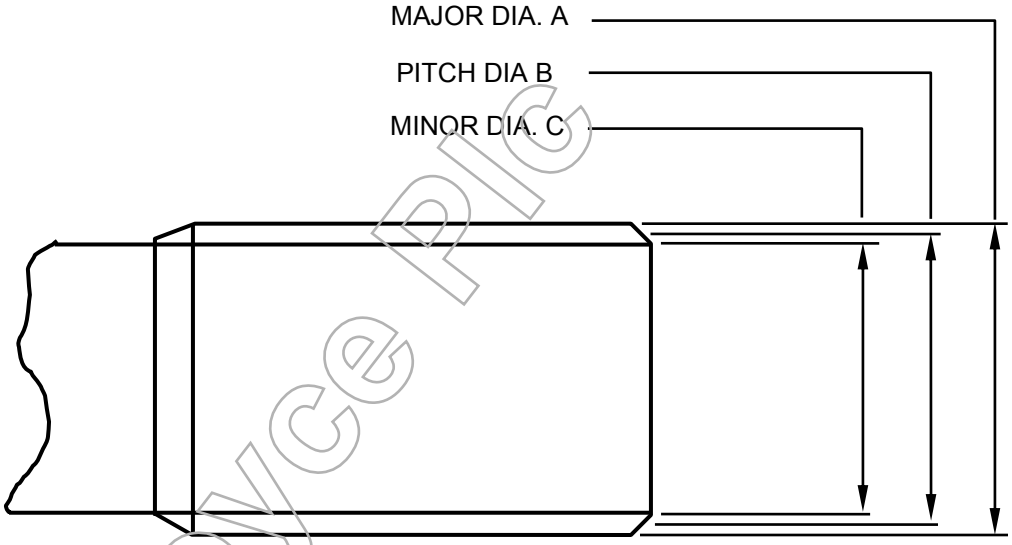


FIGURE A3 - LOCKING TORQUE GAUGE CHECK

TABLE A3 - SCREW THREAD INSPECTION DIMENSION

| | SCREW THREAD SIZE | | | | | | | |
|---|---|---|---|---|---|---|---|---|
| | .1900-32 | .2500-28 | .3125-24 | .3750-24 | .4375-20 | .5000-20 | .5625-18 | .6250-18 |
| Dia A | .1846<br>.1786 | .2444<br>.2379 | .3067<br>.2995 | .3691<br>.3619 | .4314<br>.4233 | .4938<br>.4857 | .5625<br>.5538 | .6185<br>.6098 |
| Dia B | .1646<br>.1644 | .2215<br>.2212 | .2799<br>.2797 | .3423<br>.3420 | .3992<br>.3989 | .4616<br>.4613 | .5203<br>.5200 | .5827<br>.5824 |
| Dia C | .1463 | .2006 | .2556 | .3180 | .3701 | .4325 | .4875 | .5503 |

*Note – all dimensions are in inches

Rolls Royce Plc
18-Sep-15
10:03:14
213424
Mathias Schuler



© Rolls-Royce Plc 2001



This document is the property of Rolls-Royce plc and may not be copied or communicated to a third party or used for any purpose other than for which it is supplied without express written authority of Rolls-Royce plc

This is an uncontrolled copy and will not be kept up to date



## APPENDIX B – SUGGESTED SOLUTIONS TO PROBLEMS

Table B1 lists problems experienced with Nimonic 90 wire thread inserts and provides some suggestions in order to overcome the problems.

TABLE B1 – RECOMMENDATIONS TO KNOWN PROBLEMS

| PROBLEM | CAUSES | REMEDIES |
|---|---|---|
| 1. Loss of locking torque or insufficient locking torque to meet the specification requirements | (i) Undersize and/or worn bolt | (i) Replace bolt |
| | (ii) Oversize hole* | (ii) Adopt salvage procedure |
| | (iii) Incorrect inserting tool | (iii) Replace insert and inserting tool |
| | (iv) Incorrect material of parent component | (iv) Replace component |
| | (v) "Time expired" owing to pre-build, and use of inserts for securing transportation parts | (v) Replace insert |
| GENERAL RECOMMENDATION<br>The above problem might be solved by using a new bolt | | |
| 2. Excessive locking torque | (i) Insert internal thread defective or damaged. | (i) Replace insert |
| | (ii) Non-conforming tapped hole. | (ii) Inspect tapped thread, repair if possible or adopt salvage procedure |
| 3. Insert extracted with the bolt or winding out part way | (i) Insert overstressed during assembly by installation with worn or incorrect tools | (i) Replace inserts/replace tools |
| | (ii) Non-approved practice of plated bolts used with plated inserts | (ii) Use correct bolts |
| | (iii) Seizure of bolt and insert after use at high temp, usually because of breakdown of silver plating (by wear) | (iii) Install new insert and/or bolt |
| | (iv) Combinations of above problems with tapped holes out-of-position | (iv) Adopt salvage procedure |
| * This may have been caused by interstage manufacturing chromate removal. | | |

Rolls-Royce Plc
18-Sep-15
10:03:14
213424
Matthias Schuler



© Rolls-Royce Plc 2001



This document is the property of Rolls-Royce plc and may not be copied or communicated to a third party or used for any purpose other than for which it is supplied without express written authority of Rolls-Royce plc

This is an uncontrolled copy and will not be kept up to date



TABLE B1 – RECOMMENDATIONS TO KNOWN PROBLEMS (CONTINUED)

| | PROBLEM | | CAUSES | | REMEDIES |
|---|---|---|---|---|---|
| 4. | Inserts screwed further down the tapping during installation of the bolt | (i) | Unclean tang break-off caused by incorrect depth of notch | (i) | Install new insert |
| | | (ii) | Insert tang removed incorrectly by twisting instead of using approved tang break-off punch | (ii) | Use correct tool for tang removal |
| | | (iii) | Non-approved practice of plated bolts used with plated inserts | (iii) | Use correct bolts |
| | | (iv) | Insert overstressed during assembly by installation with worn or incorrect tools | (iv) | Install new insert with correct tool in good condition |
| 5. | Insert cross-threaded during assembly | (i) | Caused by installation with incorrect tool | (i) | Gauge tapped hole and install new insert |
| | | (ii) | Last coil dislodged during tang removal operation | (ii) | Last coil may be relocated using a bent scribe, but insert may be replaced |
| 6. | Failure of tang to break-off | (i) | Notch too shallow | (i) | Install new insert |

Rolls Royce plc 18-Sep-15 10:03:14 213424 Mathias Schuller



© Rolls-Royce Plc 2001



This document is the property of Rolls-Royce plc and may not be copied or communicated to a third party or used for any purpose other than for which it is supplied without express written authority of Rolls-Royce plc